PEMKO

Stainless Steel Sliding Track Hardware System

G60 Series for Glass Doors

For Sliding Panels up to 198 lbs.

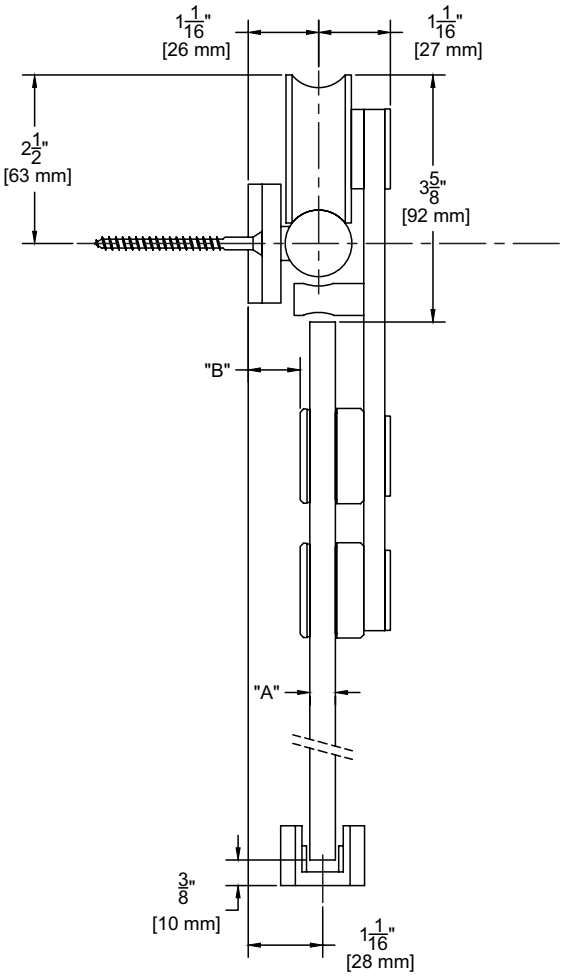

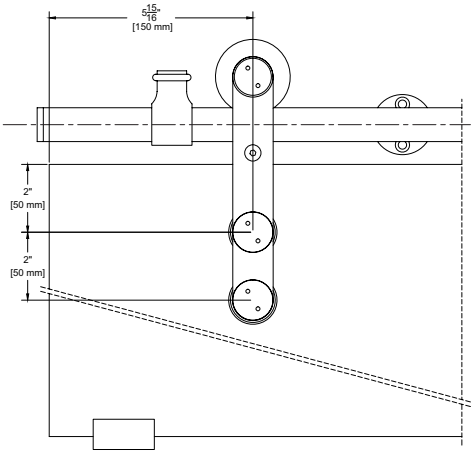

Configurations:
- Single
- Bi-parting

Installations:
- Side Wall Mount (only)

Features:
- Made of 304 stainless steel
- Nylon coated stainless steel wheel for smooth operation
- 198 lb. panel capacity
- 5 year warranty

Finishes:
- Brushed Stainless Steel (G60)
- Dark Bronze Stainless Steel (G60D)
- Polished Stainless Steel (G60P)

Kits Include:

1 ea	**BAR/_** Stainless Steel Track
–	**BRACKET2** Stainless Steel Wall Brackets
2 ea	**12** Stainless Steel Hangers
1 ea	**GLASSGUIDE** Stainless Steel Guide
2 ea	**STOP2** Stainless Steel Stops Mounting Hardware

Note: If ordering individual parts in the optional Dark Bronze or Polished finishes, be sure to include a prefix "D" for Dark Bronze or "P" for Polished Stainless

Standard Kit Sizes			
Part Number	Material	Track Length	Door Width
G60/6	304 Stainless Steel	78 3/4"	36"
G60/8	304 Stainless Steel	98 7/16"	48"
G60D/6	304 Dark Bronze Stainless Steel	78 3/4"	36"
G60D/8	304 Dark Bronze Stainless Steel	98 7/16"	48"
G60P/6	304 Polished Stainless Steel	78 3/4"	36"
G60P/8	304 Polished Stainless Steel	98 7/16"	48"

Glass Thickness "A"	Distance from Wall "B"
3/8"	3/4"
1/2"	5/8"

ASSA ABLOY

The global leader in door opening solutions

Copyright © 2015, Pemko Manufacturing Co., an ASSA ABLOY Group company. All rights reserved.
Reproduction in whole or in part without the express written permission of Pemko Manufacturing Co. is prohibited.