C-415 PIVOTING DOOR SERIES KIT

INSTRUCTION SHEET
FOR 1-3/4" DOORS UP TO 120LBS PER PANEL

PARTS LIST (FOR 2 DOOR KIT)

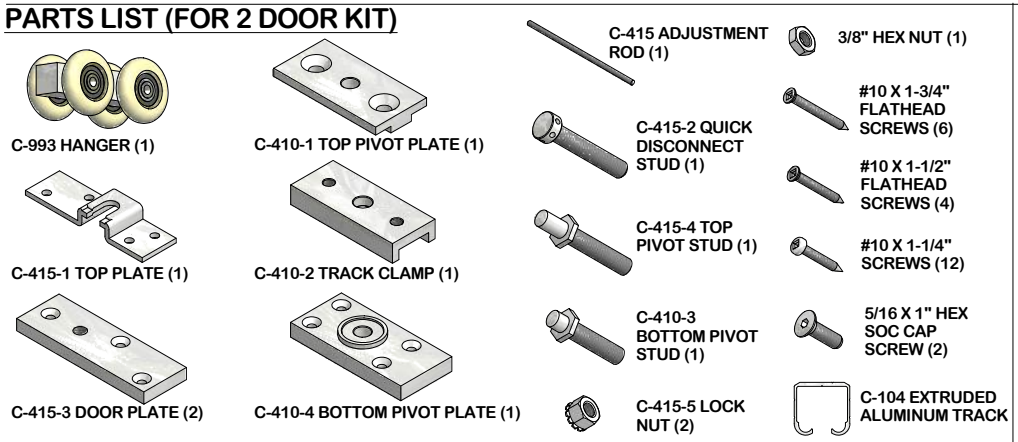

DIMENSION DETAILS:

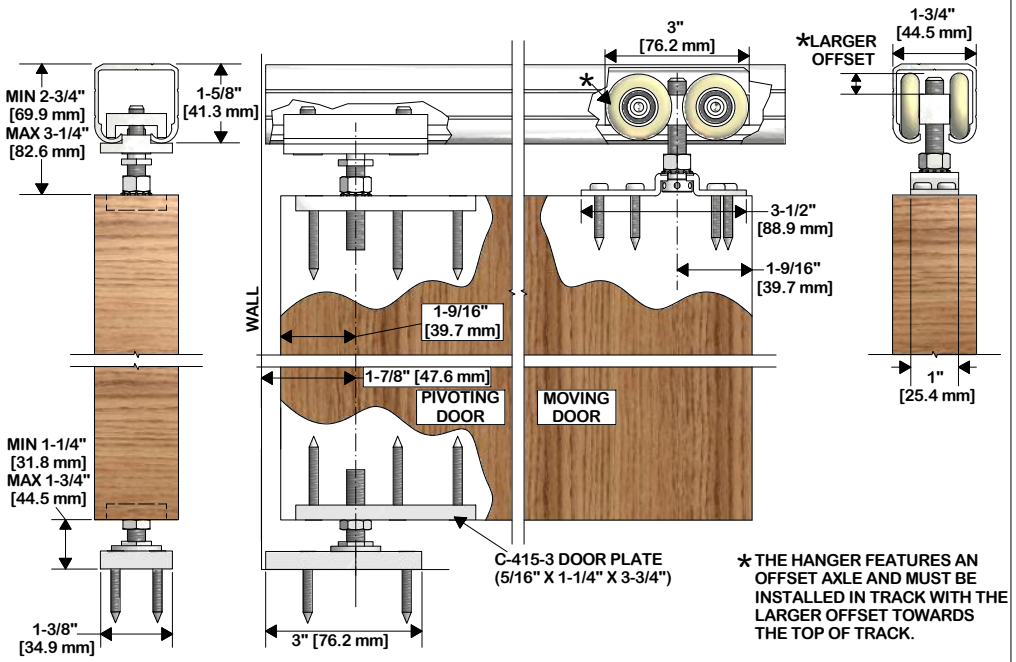

* THE HANGER FEATURES AN OFFSET AXLE AND MUST BE INSTALLED IN TRACK WITH THE LARGER OFFSET TOWARDS THE TOP OF TRACK.

PLAN VIEWS SHOWING CLEARANCE BETWEEN DOORS

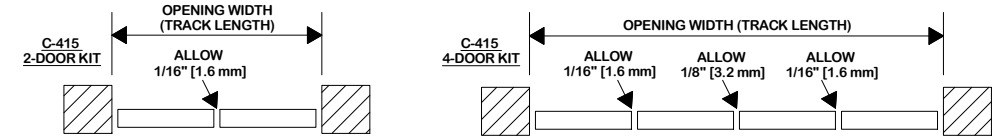

INSTALLATION INSTRUCTIONS

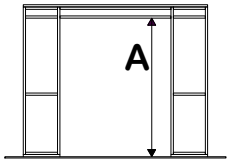

STEP 1
DETERMINE DOOR SIZE/HEADER HEIGHT BASED ON DIMENSIONS SHOWN IN DETAIL VIEWS AND CLEARANCE REQUIRED BELOW DOOR:
-MINIMUM OPENING HEIGHT (A) = DOOR HEIGHT + 4"
-MAXIMUM OPENING HEIGHT (A) = DOOR HEIGHT + 5"

STEP 2
CUT TRACK TO LENGTH & DRILL 13/64"Ø MOUNTING HOLES 10-12" C/C. TRACK LENGTH SHOULD EQUAL FINISHED OPENING SIZE LESS 1/8".
1)INSERT 5/16" X 1" HEX SOC CAP SCREWS(2) THROUGH C-410-1 TOP PIVOT PLATE AND THREAD CAP SCREWS INTO C-410-2 TRACK CLAMP. 2) INSERT ASSEMBLY IN TRACK ON PIVOTING END. 3) THREAD C-415-5 LOCK NUT ONTO C-415-2 HANGER STUD WITH LOCK WASHER FACING BOLT HEAD. 4) THREAD HANGER STUD INTO C-993 HANGER (SEE DIMENSION DETAILS FOR AXLE OFFSET NOTE).
5) INSERT HANGER ASSEMBLY INTO OPPOSITE END OF TRACK. SECURE TRACK TO HEADER WITH #10 X 1-1/4" SCREWS (8).

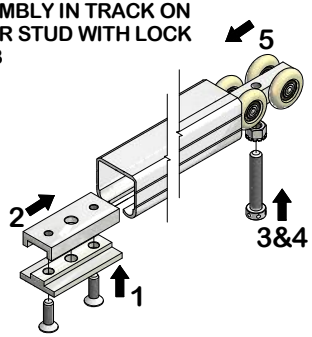

STEP 3
PREPARE DOOR FOR C-415-3 DOOR PLATES. IT IS RECOMMENDED FOR PLATES TO BE FLUSH WITH TOP AND BOTTOM OF DOOR. (DRILL 7/16" CLEARANCE HOLES FOR PIVOT BOLTS) AND SECURE PLATES TO TOP AND BOTTOM OF PIVOTING DOOR WITH #10 X 1-3/4" SCREWS (3 PER PLATE).

STEP 4
LOCATE AND SECURE C-415-1 TOP PLATE ON MOVING DOOR WITH #10 X 1-1/4" SCREWS (4). SEE DIMENSION DETAILS FOR LOCATION.

STEP 5
LOCATE AND INSTALL C-410-4 BOTTOM PIVOT PLATE ON FLOOR WITH #10 X 1-1/2" FLAT HEAD SCREWS (4). FOR 1-3/4" DOORS A MINIMUM OF 1-7/8" FROM WALL TO CENTER OF PIVOT BEARING ON BOTTOM PLATE IS REQUIRED. (SEE DIMENSION DETAILS).

STEP 6
1) THREAD C-415-5 LOCK NUT(1) ONTO C-415-4 TOP PIVOT STUD AND THREAD INTO TOP DOOR PLATE OF PIVOTING DOOR. 2) THREAD 3/8" HEX NUT ONTO C-410-3 BOTTOM PIVOT STUD AND THREAD INTO BOTTOM DOOR PLATE OF PIVOTING DOOR. (NOTE: THREAD BOLTS FULLY INTO DOOR PLATES IN ORDER TO PROVIDE ADEQUATE CLEARANCE FOR NEXT STEP).

STEP 7
DOORS SHOULD BE PREASSEMBLED WITH HINGE (BY OTHERS) BY THIS STEP. RAISE DOOR ASSEMBLY INTO PLACE BY POSITIONING C-415-4 TOP PIVOT BOLT INTO C-410-1 TOP PIVOT PLATE. GUIDE C-410-3 BOTTOM PIVOT BOLT INTO C-410-4 BOTTOM PIVOT PLATE BEARING.

STEP 8
ADJUST C-415-4 TOP PIVOT BOLT UPWARDS USING A 5/8" WRENCH TO RE-ENGAGE C-410-1 TOP PIVOT PLATE AND LOCK TRACK PIVOT PLATE ASSEMBLY USING 3/16" HEX KEY.

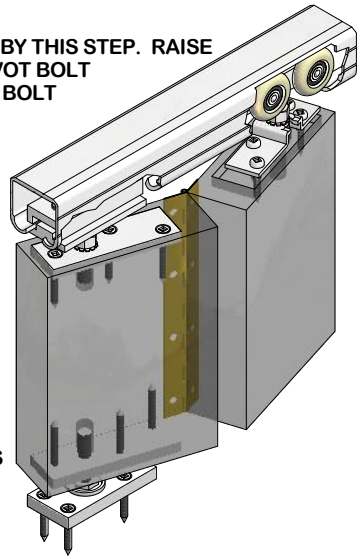

STEP 9
CAREFULLY SWING MOVING DOOR INTO POSITION AND ENGAGE C-415-2 HANGER STUD (STEP 2) INTO C-415-1 TOP PLATE. ADJUST STUD WITH ADJUSTMENT ROD PROVIDED. SECURE SETTING WITH LOCK NUT.
ALTHOUGH HANGER C-993 IS RATED FOR OVER 150LBS, MAJORITY OF LOAD SHOULD BE CARRIED BY THE BOTTOM PIVOT ASSEMBLY FOR SMOOTH OPERATION.

STEP 10
IF PIVOTING OF DOOR RESULTS IN BOTTOM PIVOT BOLT LIFTING OFF OF C-410-4 BOTTOM PIVOT PLATE THIS INDICATES THAT THE PIVOTING PLANE IS NOT PERPENDICULAR TO THE TRACK. ADJUST PLUMB AS REQUIRED BY REPOSITIONING TRACK PIVOT PLATE ASSEMBLY. ONCE ADJUSTMENTS ARE FINAL, LOCK IN PLACE WITH C-415-5 LOCK NUTS.

Crowdertrack "Smooth as flight"

K.N. CROWDER MFG. INC.
1220 BURLOAK DRIVE
BURLINGTON, ONTARIO, CANADA, L7L 6B3
TELEPHONE: 905-315-9788 - FAX: 905-315-8090
TOLL FREE FAX: 1-800-567-0123

K.N. CROWDER INC.
210 EIGHTH STREET SOUTH
LEWISTON, NEW YORK, U.S.A. 14092
TELEPHONE: 1-716-754-8247
TOLL FREE FAX: 1-800-567-0123

WEBSITE: www.kncrowder.com --- E-MAIL: customerservice@kncrowder.com